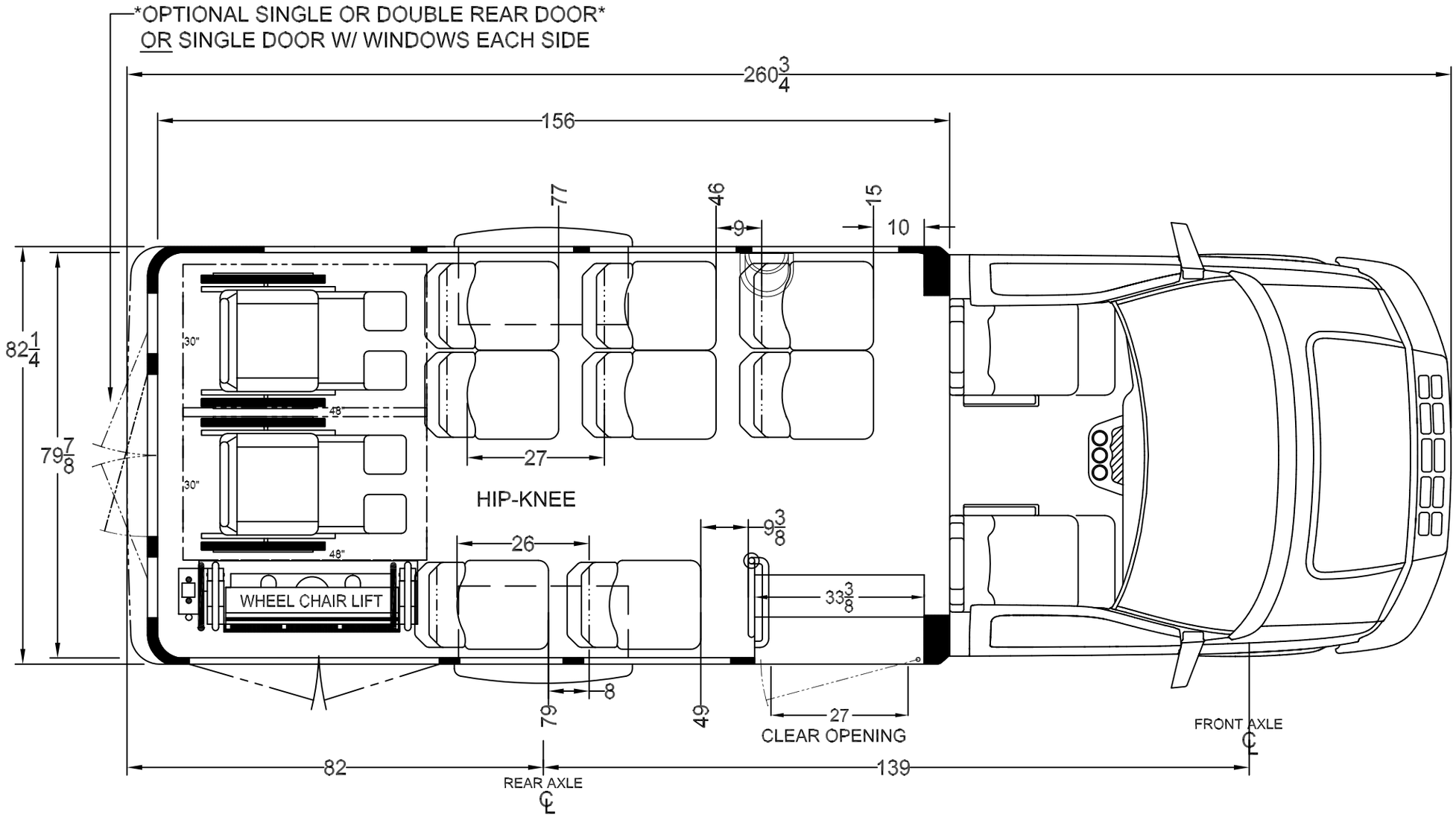

NOTES:

1. THIS FLOOR PLAN AVAILABLE WITH L-TRACK ONLY

"THIS DRAWING AND THE INFORMATION CONTAINED THEREON ARE THE EXCLUSIVE PROPERTY OF TURTLE TOP AND SHALL NOT BE COPIED OR DUPLICATED IN ANY MANNER WITHOUT OUR WRITTEN CONSENT"

TURTLETOP

FILE NAME :
9 PASSENGER + DRIVER AND 2 WHEEL CHAIRS

DFTSN.	DATE	SCALE	MODEL	CHASSIS TYPE	FLOOR LENGTH	DRAWING #
HLH	01/23/05	DNS	TERRA TRANSPORT DRW	GM	156" (13')	1215619